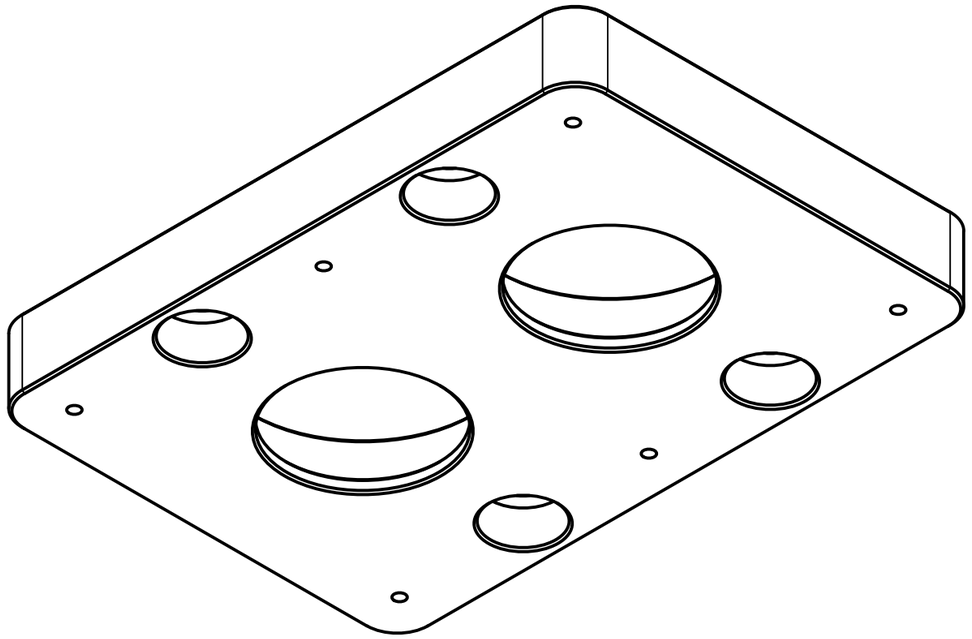

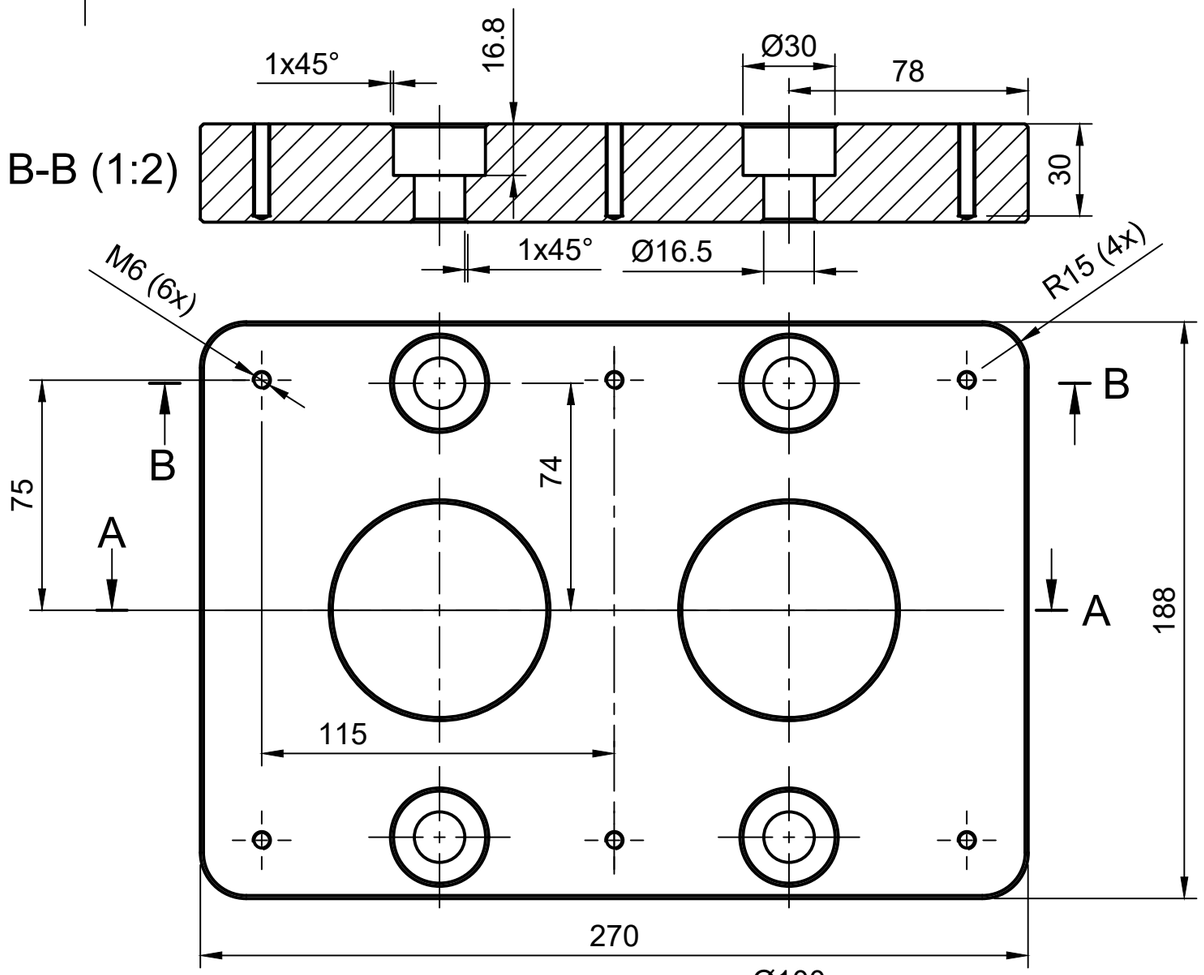

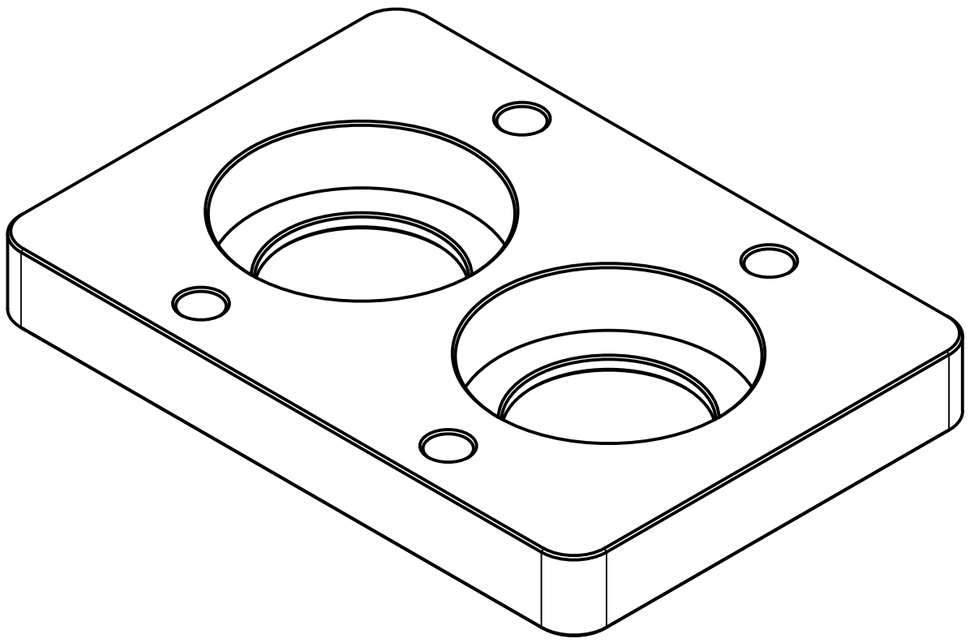

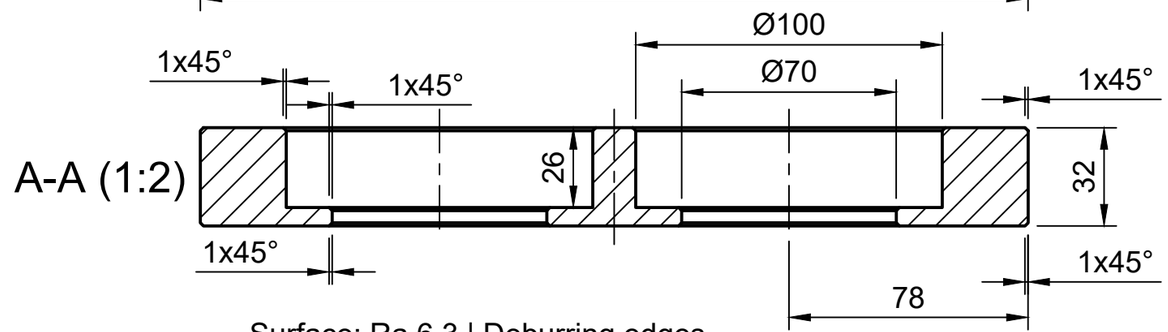

Surface: Ra 6,3 | Deburring edges

Weight 8,62 kg		Material Steel - S235			
Machine Name Shredder PRO		Description Bearing support - x2			
Projection method First angle		Release date 05.11.2021	Drawing no. SHRPRO-2 1000.04-0		Rev. A
General tolerances ISO 2768-m		Doc. type Part	Units unless specified mm	Sheet size A3	Scale 1:2	Sheet 1/1