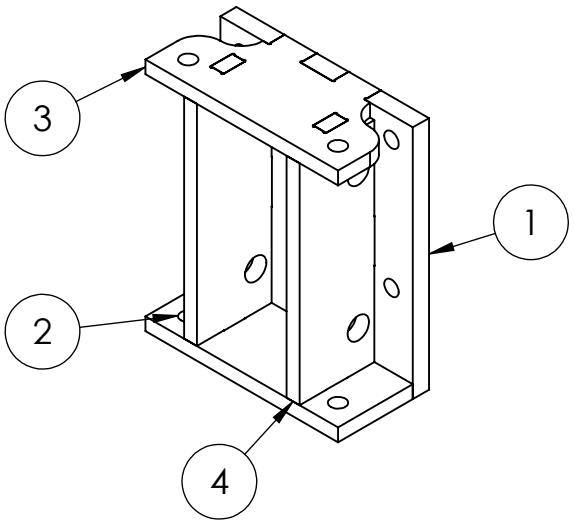

ITEM NO.	PART NUMBER	QTY.
1	08_MOTOR-MOUNT_x1_15mm_FERRO	1
2	09_M-MOUNT-BTM-FLANGE_x1_12mm_FERRO	1
3	10_M-MOUNT-TOP-FLANGE_x1_12mm_FERRO	1
4	11_M-MOUNT-RIB_x2_12mm_FERRO	2

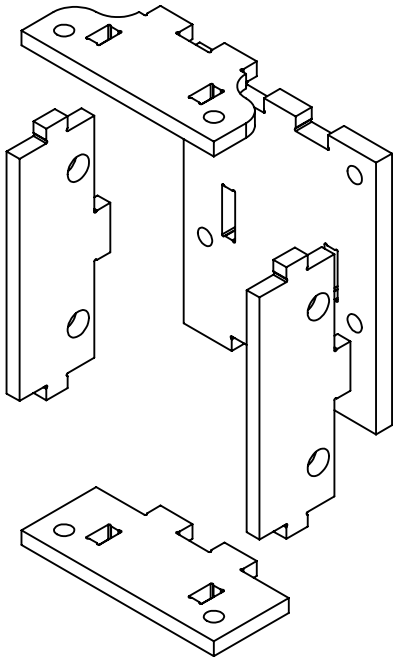

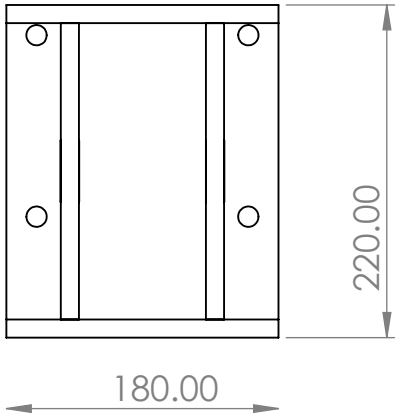

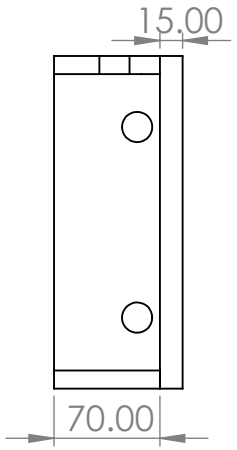

UNLESS OTHERWISE SPECIFIED:
DIMENSIONS ARE IN MILLIMETERS
SURFACE FINISH:
TOLERANCES:
LINEAR:
ANGULAR:

FINISH:

DEBURR AND BREAK SHARP EDGES

DO NOT SCALE DRAWING

REVISION

	NAME	SIGNATURE	DATE
DRAWN			
CHK'D			
APPV'D			
MFG			
Q.A			

MATERIAL:

WEIGHT:

TITLE:

DWG NO. Motor mount Assembly

A4

SCALE:1:10

SHEET 1 OF 1