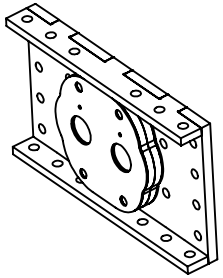

ITEM NO.	PART NUMBER	QTY.
1	15_BEARING-HOUSING_x4_12mm_INOX	2
2	bearing_nj2208em_0	2
3	17_BEARING-RETAINER_x3_2mm_INOX	2
4	02_MAIN-ENDPANEL_x2_15mm_FERRO	1
5	03_ENDPANEL-FLANGE_x4_12mm_FERRO	2

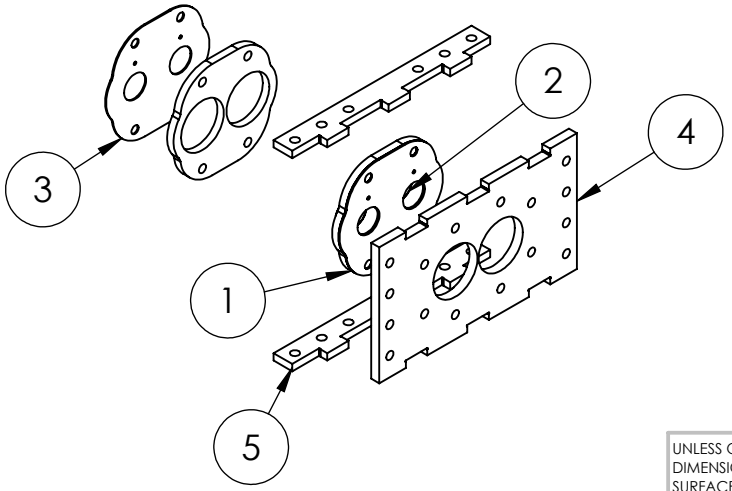

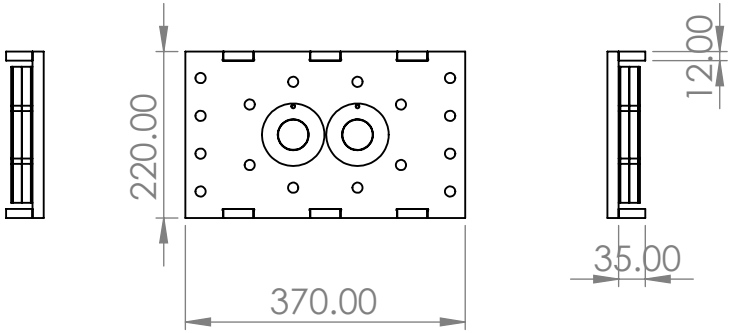

UNLESS OTHERWISE SPECIFIED:
DIMENSIONS ARE IN MILLIMETERS
SURFACE FINISH:
TOLERANCES:
LINEAR:
ANGULAR:

FINISH:

DEBURR AND BREAK SHARP EDGES

DO NOT SCALE DRAWING

REVISION

	NAME	SIGNATURE	DATE
DRAWN			
CHK'D			
APPV'D			
MFG			
Q.A			

TITLE:

MATERIAL:

WEIGHT:

DWG NO. Main endpanel Assembly

A4

SCALE:1:10

SHEET 1 OF 1