ITEM NO.	PART NUMBER	QTY.
1	21-STATIONARY-KNIFE-1_6mm_x38_FERRO	19
2	22_STATIONARY-KNIFE-2a_4mm_x38_FERRO	19
3	20_STATIONARY-KNIFE-END_x4_6mm_FERRO	2
4	23_STATIONARY-KNIFE-2b_x36_2.5mm_FERRO	18

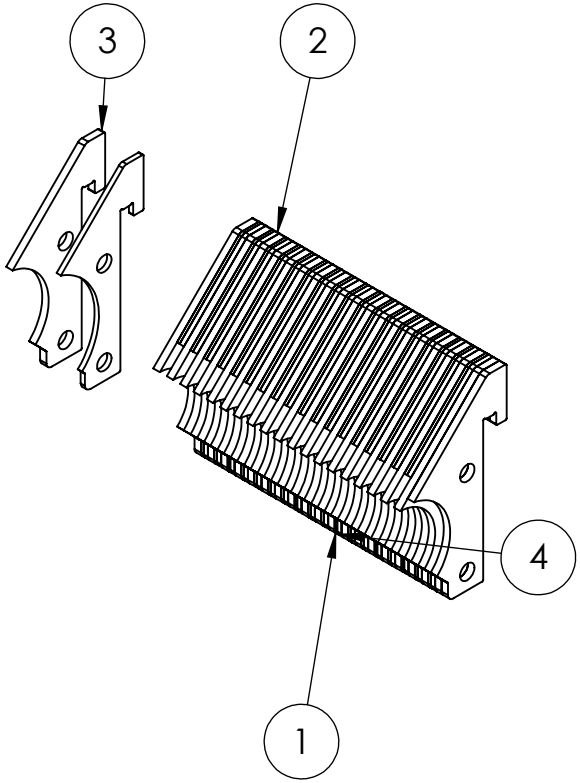

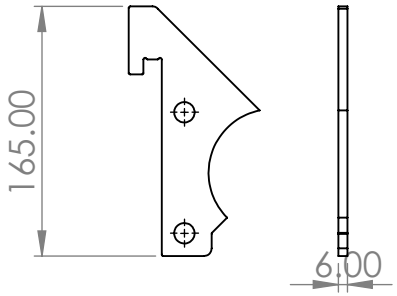

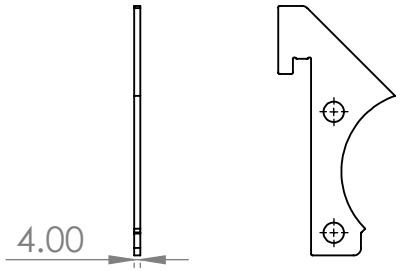

UNLESS OTHERWISE SPECIFIED:
DIMENSIONS ARE IN MILLIMETERS
SURFACE FINISH:
TOLERANCES:
LINEAR:
ANGULAR:

FINISH:

DEBURR AND BREAK SHARP EDGES

DO NOT SCALE DRAWING

REVISION

	NAME	SIGNATURE	DATE
DRAWN			
CHK'D			
APPV'D			
MFG			
Q.A			

TITLE:

MATERIAL:

WEIGHT:

DWG NO. 160_Stationary

A4

SCALE:1:5

SHEET 1 OF 1