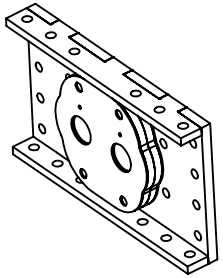

ITEM NO.	PART NUMBER	QTY.
1	15_BEARING-HOUSING_x4_12mm_INOX	2
2	bearing_nj2208em_0	2
3	17_BEARING-RETAINER_x3_2mm_INOX	2
4	02_MAIN-ENDPANEL_x2_15mm_FERRO	1
5	03_ENDPANEL-FLANGE_x4_12mm_FERRO	2

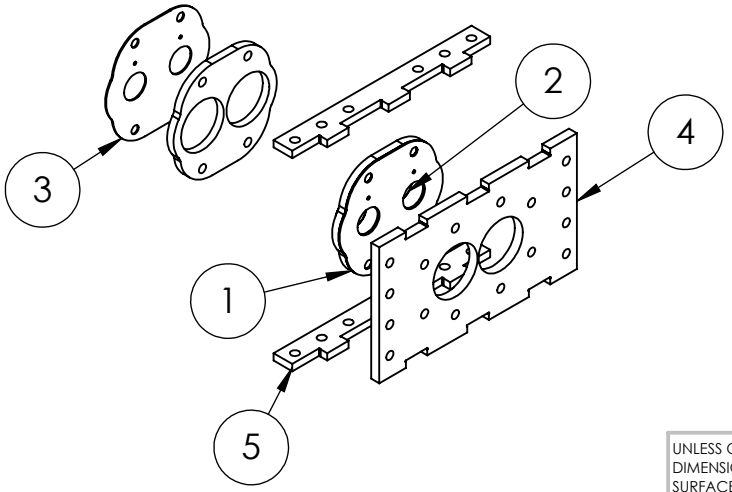

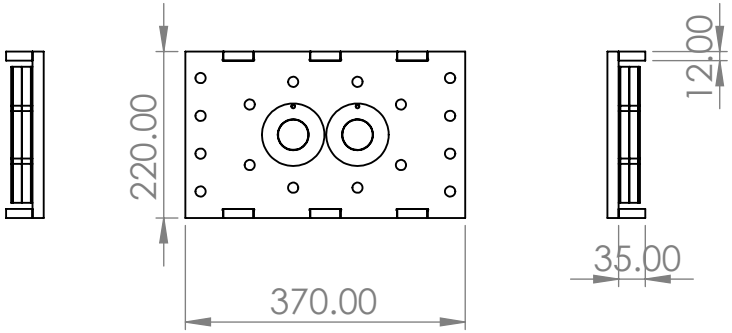

UNLESS OTHERWISE SPECIFIED: DIMENSIONS ARE IN MILLIMETERS SURFACE FINISH: TOLERANCES: LINEAR: ANGULAR:	FINISH:			DEBURR AND BREAK SHARP EDGES	DO NOT SCALE DRAWING	REVISION
	NAME	SIGNATURE	DATE			TITLE:
DRAWN						
CHK'D						
APPV'D						
MFG						
Q.A				MATERIAL:	DWG NO. Main endpanel Assembly	A4
				WEIGHT:	SCALE:1:10	SHEET 1 OF 1