ITEM NO.	PART NUMBER	QTY.
1	washer_m10	3
2	18_MAIN-TOPLATE_x1_12mm_FERRO	1
3	Main endpanel Assembly	2
4	Stationary knife array Assembly	2
5	01_MAIN-BASEPLATE_x1_15mm_FERRO	1
6	spur_gear_mod5_17t_p85_od95_id40_fw50	2
7	Motor mount Assembly	1
8	Shaft and blade assembly	1
9	Shaft and blade assembly slave	1
10	Side Assembly	2
11	16_BEARING-HOUSING-ENDCAP_x1_2mm_INOX	1
12	14_MOTOR-PACKER_x4_10mm_FERRO	4
13	Motor bay Assembly	1
14	Sieve assembly	1

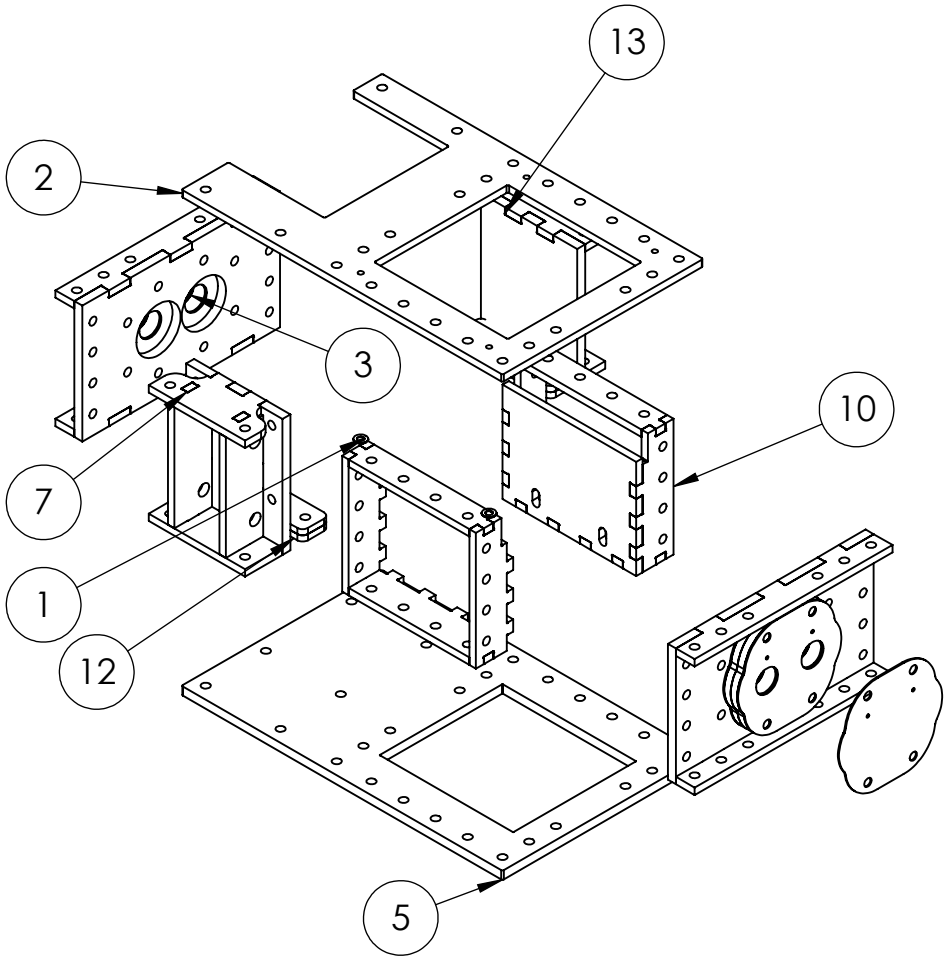

UNLESS OTHERWISE SPECIFIED:
DIMENSIONS ARE IN MILLIMETERS
SURFACE FINISH:
TOLERANCES:
LINEAR:
ANGULAR:

FINISH:

DEBURR AND BREAK SHARP EDGES

DO NOT SCALE DRAWING

REVISION

	NAME	SIGNATURE	DATE
DRAWN			
CHK'D			
APPV'D			
MFG			
Q.A			

TITLE:

MATERIAL:

DWG NO. 100_ShredderBoxAssembly

A4

WEIGHT:

SCALE:1:20

SHEET 1 OF 1