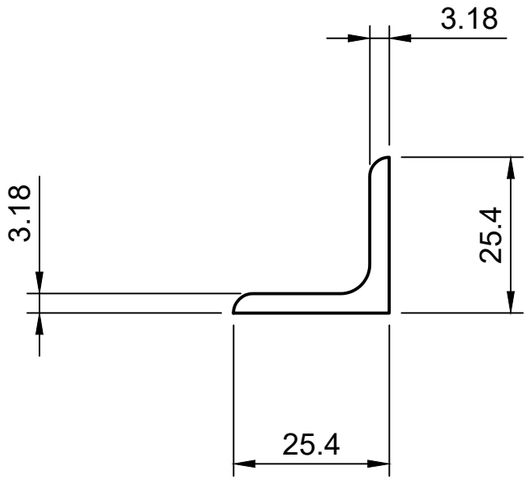

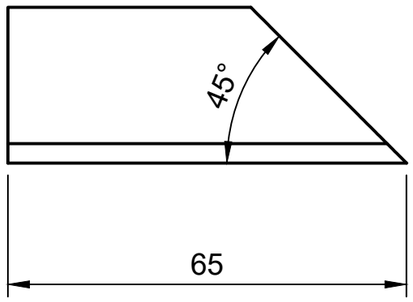

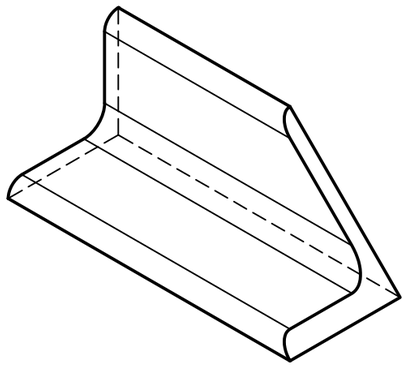

Surface: Ra 6,3 | Deburring edges

Weight 68.816 g	Material Steel				
Machine ETMINJ 1.0	Description Frame base angle 7				
Projection method First angle	Release date 20.04.2023	Drawing no. ETMINJ-1-1100.07-0			Rev. 1
General tolerances ISO 2768-m	Doc. type Part	Units unless specified mm/g	Sheet size A3	Scale 1:1	Sheet 1/1