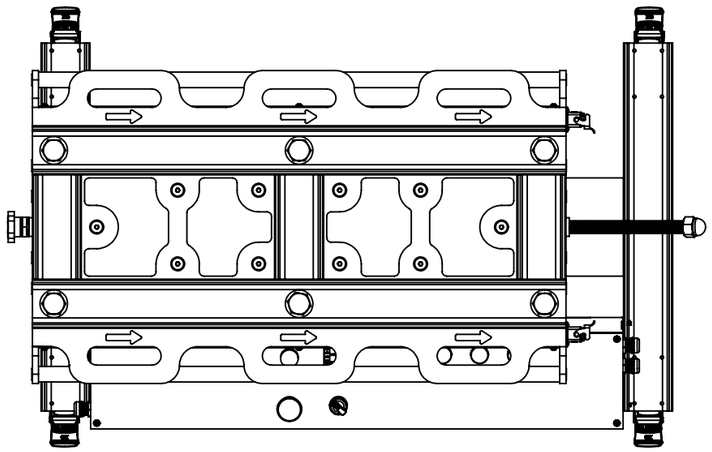

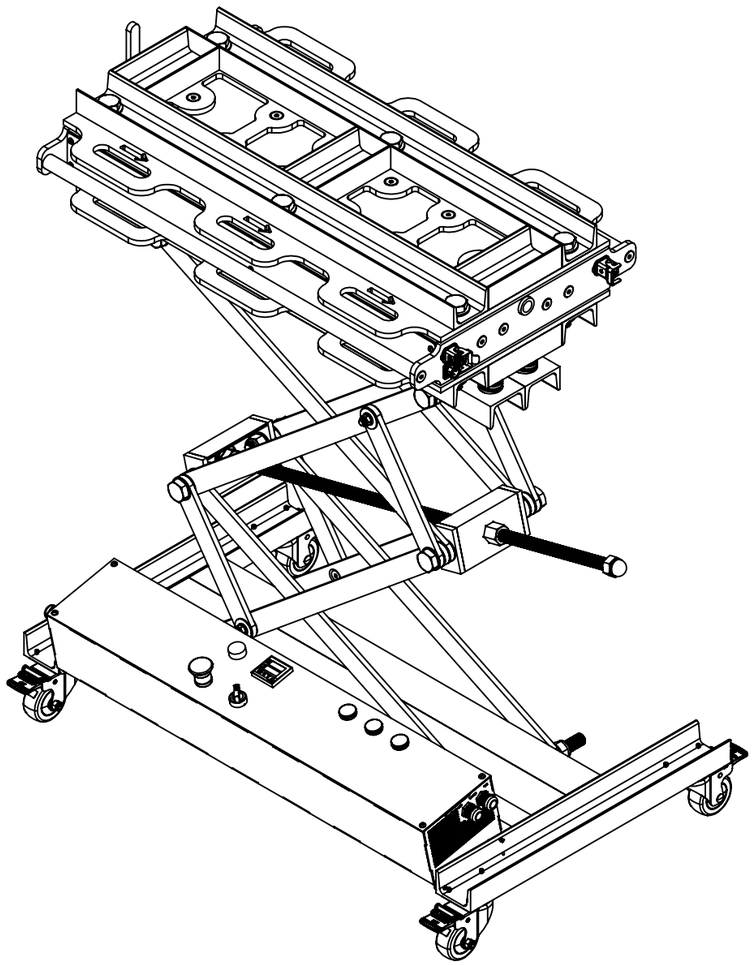

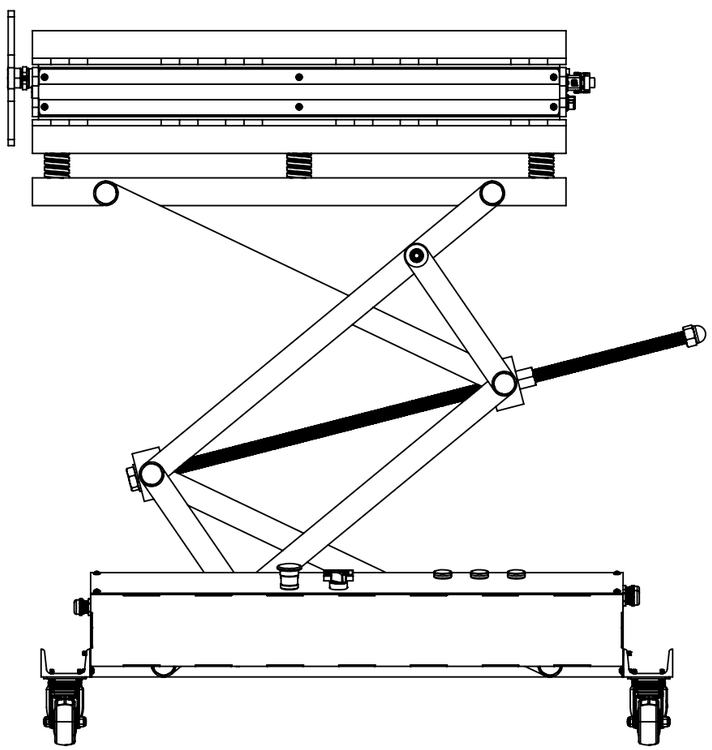

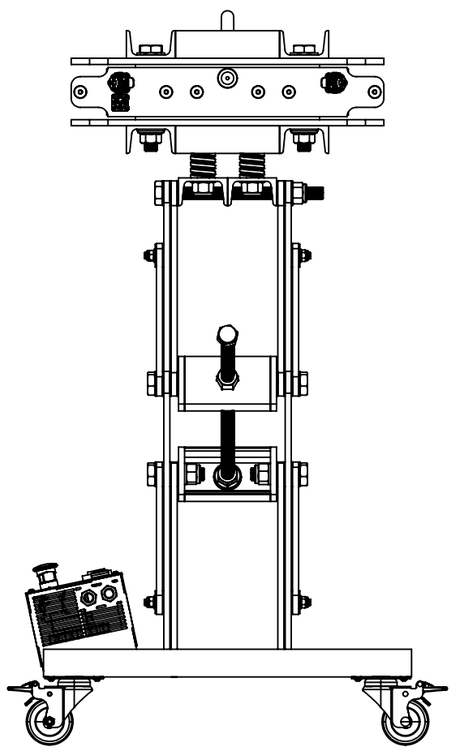

ITEM NO.	PART NUMBER	QTY.
1	RPSDM-V3 0000.01-A Deck	1
2	RPSDM-V3 1000.00-A Mould Assembly	1
3	RPSDM-V3 2000.00-A Scissor Table Assembly	1
4	RPSDM-V3 3000.00-A Electronics Enclosure Assembly (Fixed)	1

PART NUMBER AND NAME:
RPSDM-V3 0000.00-A Recycled Plastic Skateboard Deck Mould Assembly

MATERIAL:	FINISH:	WEIGHT:
N/A	N/A	282500 g
PROJECTION METHOD: FIRST ANGLE	GENERAL TOLERANCES: ISO 2768-1	DO NOT SCALE DRAWING

RELEASE DATE:	DOC. TYPE:	SHEET SIZE:	SCALE:	SHEET:
13/05/2020	PART	A3	1:10	4 OF 51

BY SA