| ITEM NO. | QTY. | PART NUMBER | DESCRIPTION |
|---|---|---|---|
| 1 | 1 | ARB-1 3100.00-0 | Main Frame |
| 2 | 1 | ARB-1 3200.00-0 | Frame Base |
| 3 | 1 | ARB-1 3300.00-0 | Mold Table |

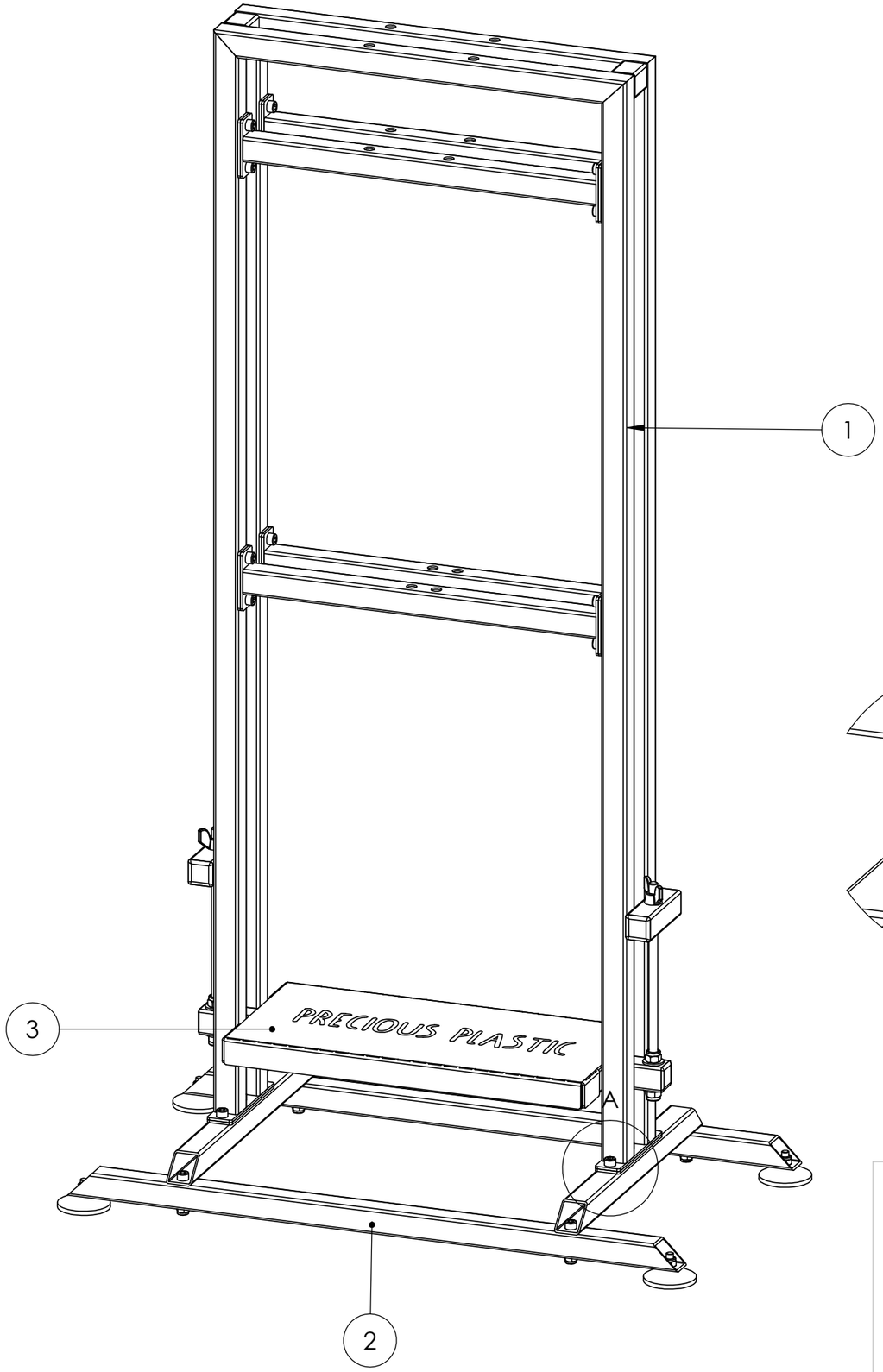


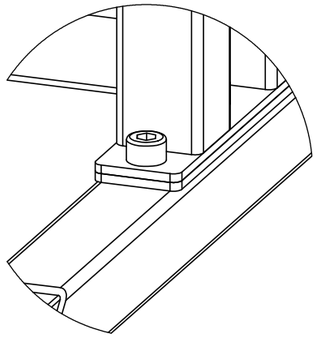

DETAIL A
SCALE 1 : 2

| | | | | | |
|---|---|---|---|---|---|
| Weight<br>**24,46 kg** | | Material<br>**Combined** | | | |
| Machine<br>**Arbor Press 1.0** | | Description<br>**Frame Assembly** | | | |
| Projection Method<br>**First Angle** | Release Date<br>**11/02/23** | Drawing No.<br>**ARB-1 3000.00-0** | | | Rev.<br>**1** |
| General Tolerances<br>**ISO 2768-m** | Doc. Type<br>**Assembly** | Units<br>**mm/g** | Sheet Size<br>**A3** | Scale<br>**1:6** | Sheet<br>**1/1** |

**SOLIDWORKS Educational Product. For Instructional Use Only.**