ITEM NO.	QTY.	PART NUMBER	DESCRIPTION
1	1	ARB-1 2300.01-0	Side plate
2	2	ARB-1 2300.02-0	End plate
3	2	-	M5 Locknut
4	2	-	M5 Socket bolt 10mm

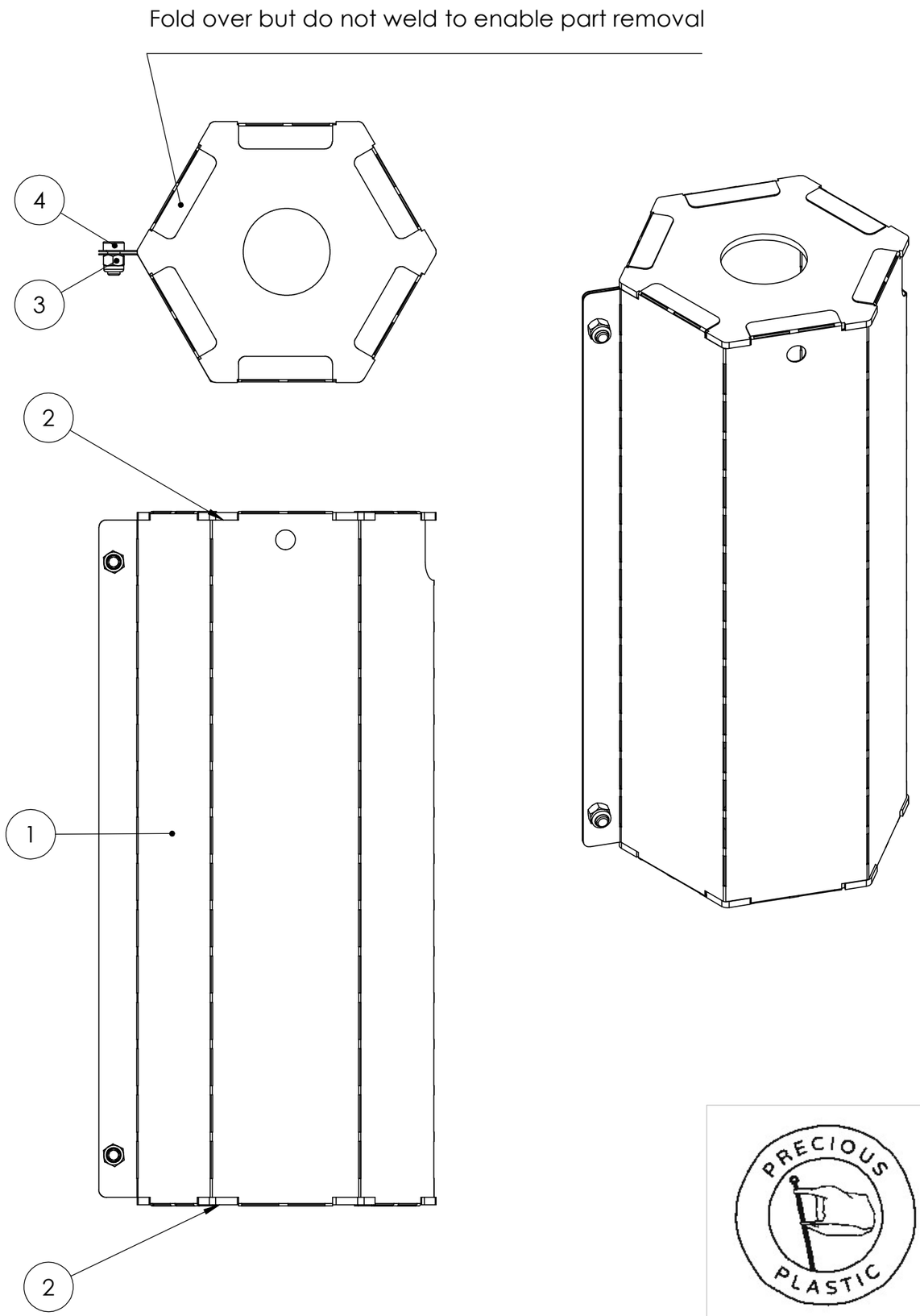

Weight **822 g**	Material **Combined**				
Machine **Arbor Press 1.0**	Description **Insulation assembly**				
Projection Method **First Angle**	Release Date **11/02/23**	Drawing No. **ARB-1 2300.00-0**			Rev. **1**
General Tolerances **ISO 2768-m**	Doc. Type **Assembly**	Units **mm/g**	Sheet Size **A3**	Scale **1:2**	Sheet **1/1**

SOLIDWORKS Educational Product. For Instructional Use Only.