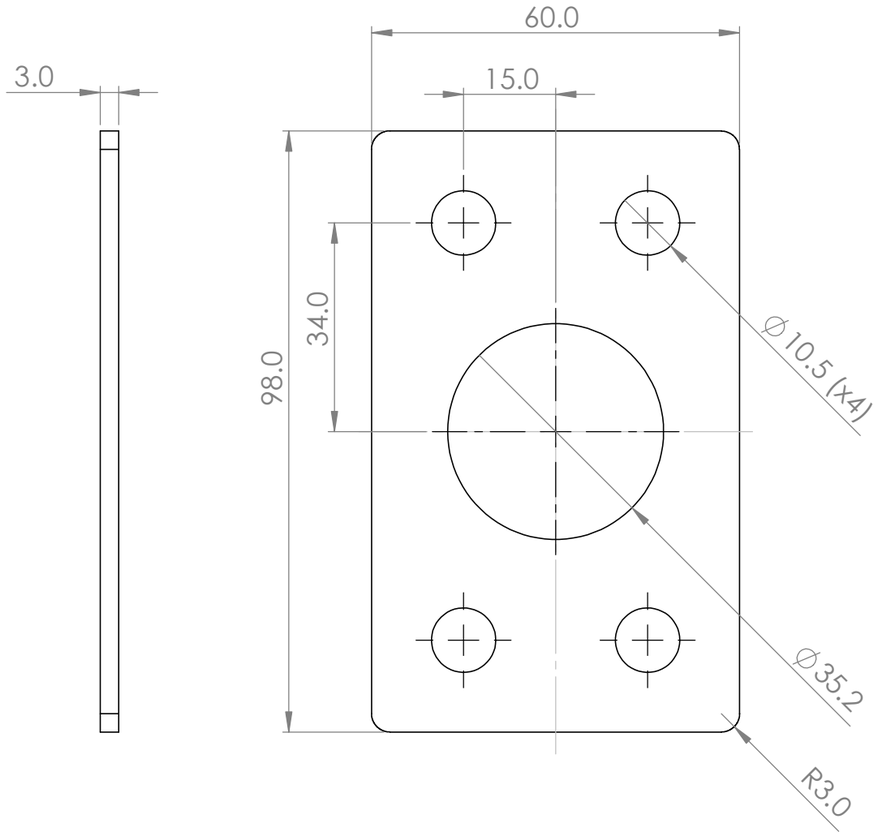

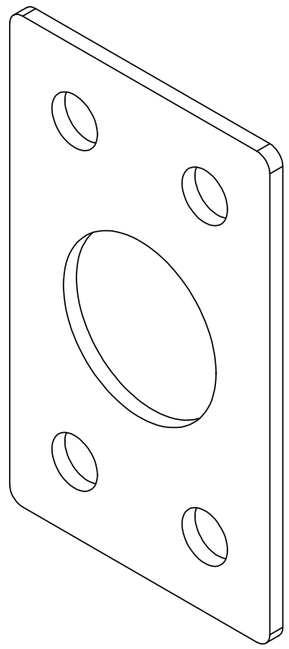

Deburr sharp edges

Weight **106 g**	Material **Steel sheet 3mm**				
Machine **Arbor Press 1.0**	Description **Lasercut suspension plate for barrel**				
Projection Method **First Angle**	Release Date **11/02/23**	Drawing No. **ARB-1 2100.05-0**			Rev. **1**
General Tolerances **ISO 2768-m**	Doc. Type **Part**	Units **mm/g**	Sheet Size **A3**	Scale **1:1**	Sheet **1/1**

SOLIDWORKS Educational Product. For Instructional Use Only.