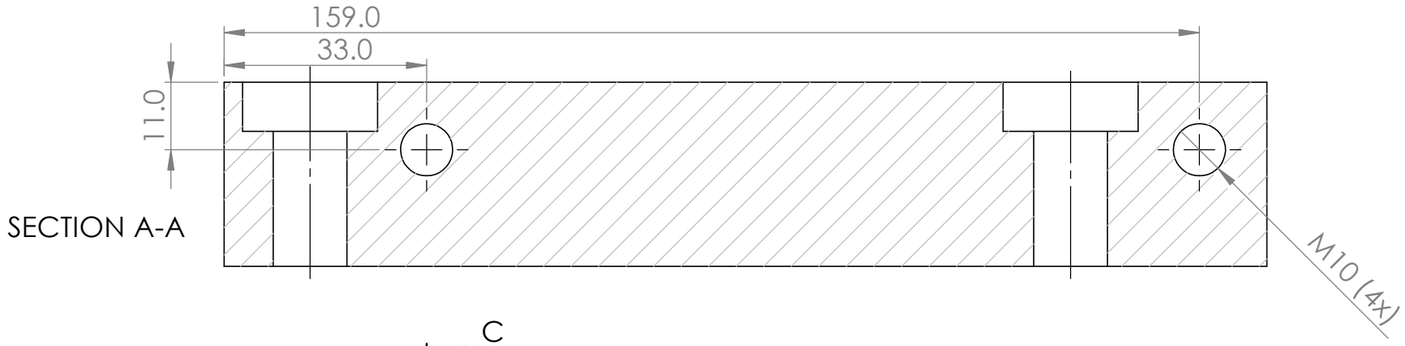

SECTION A-A

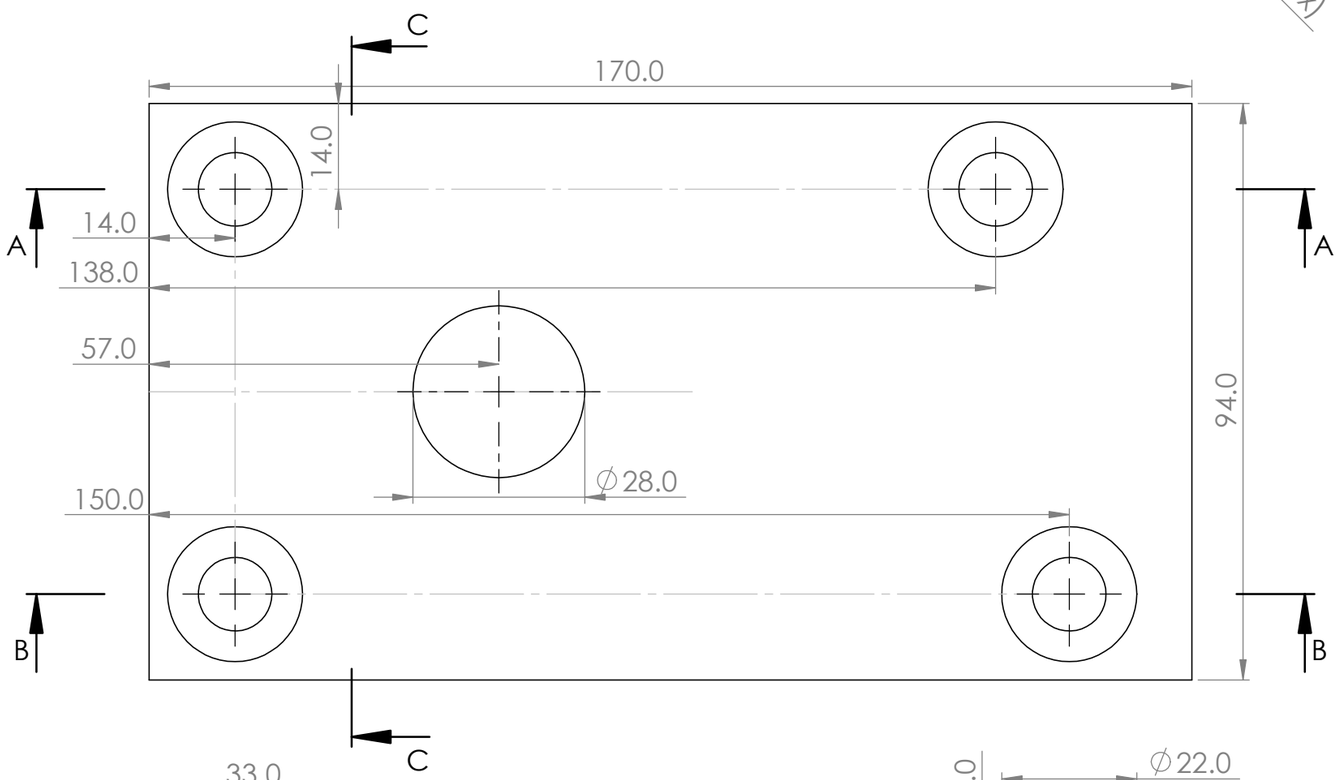

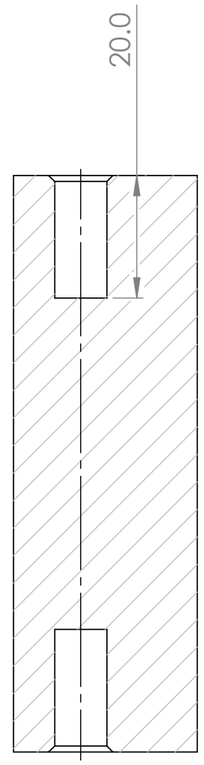

SECTION C-C

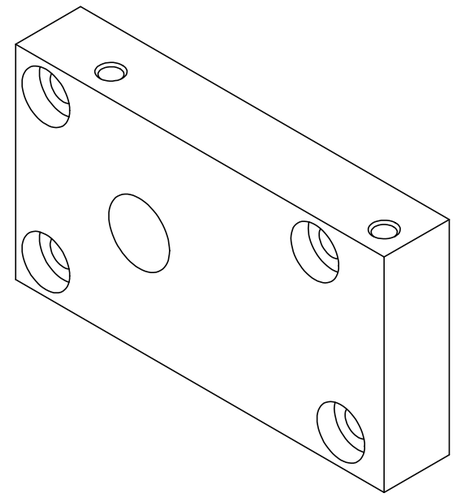

(1:2)

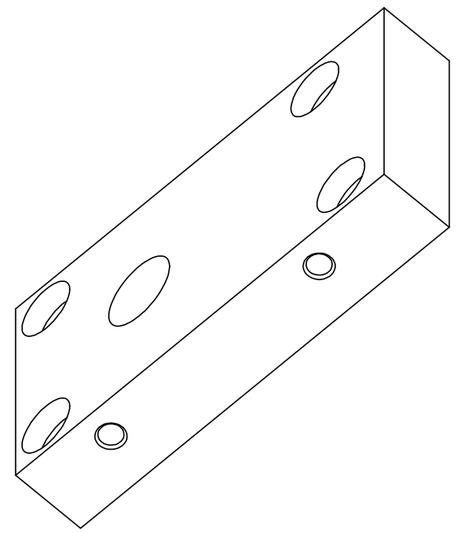

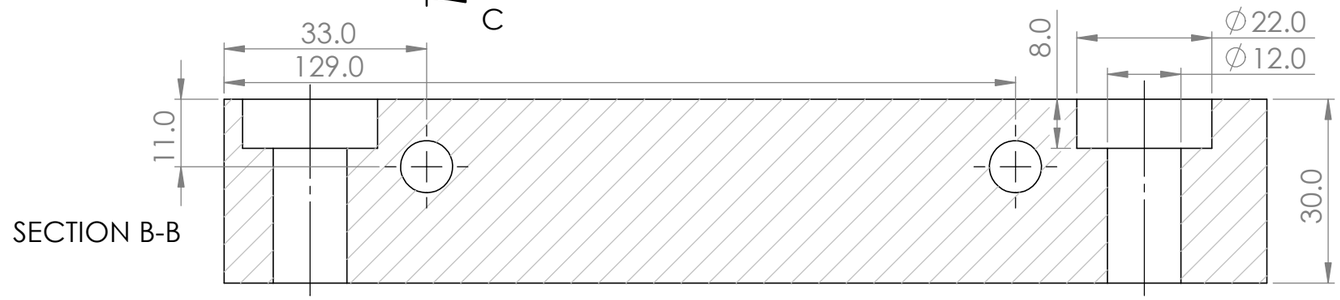

SECTION B-B

Surface: Ra 6,3. Deburr sharp edges

Weight **1,20 kg**	Material **Al 6061**				
Machine **Arbor Press 1.0**	Description **Milled front of gearbox**				
Projection Method **First Angle**	Release Date **11/02/23**	Drawing No. **ARB-1 1100.01-0**			Rev. **1**
General Tolerances **ISO 2768-m**	Doc. Type **Part**	Units **mm/g**	Sheet Size **A3**	Scale **1:1**	Sheet **1/1**

SOLIDWORKS Educational Product. For Instructional Use Only.