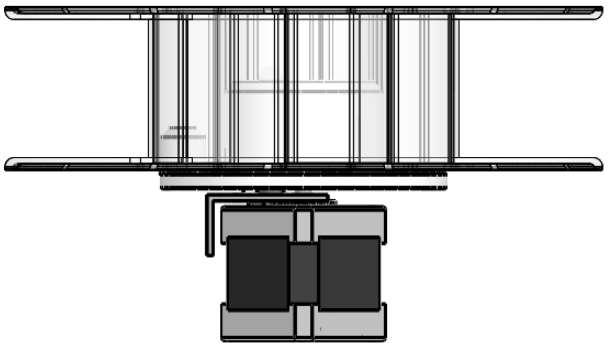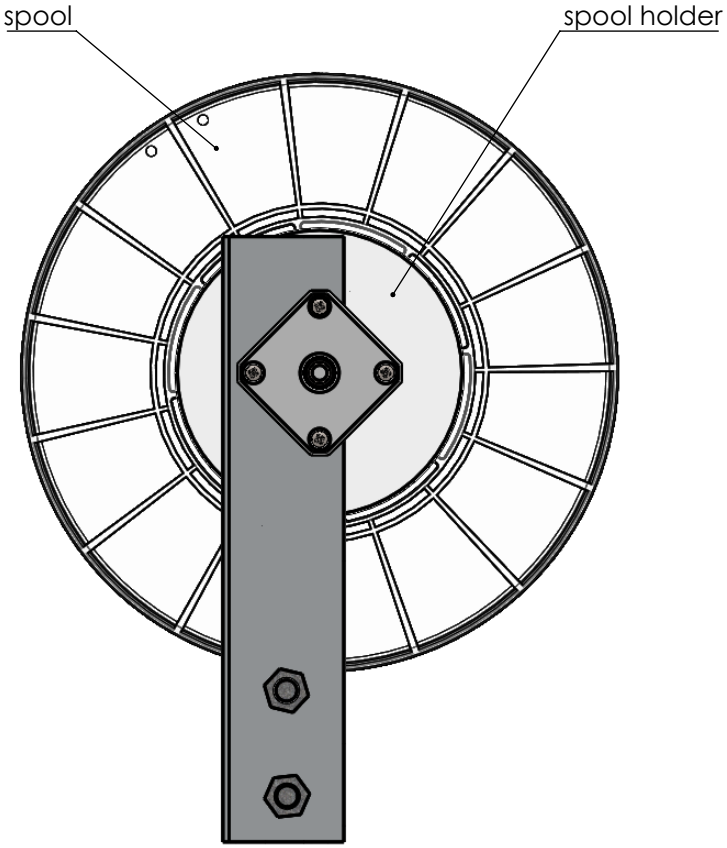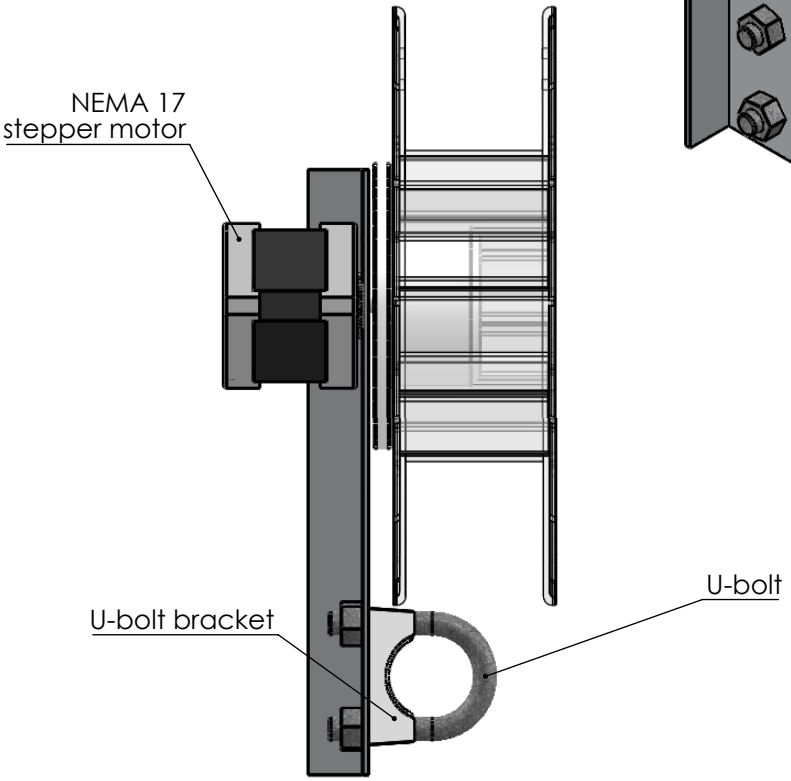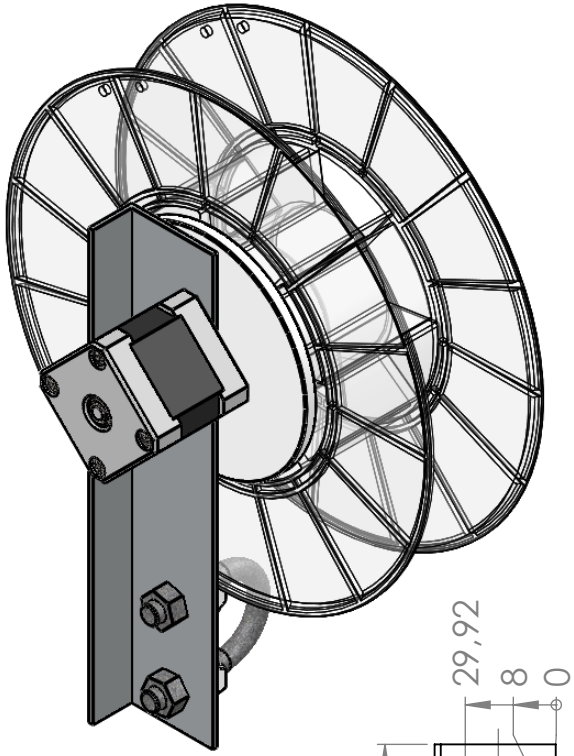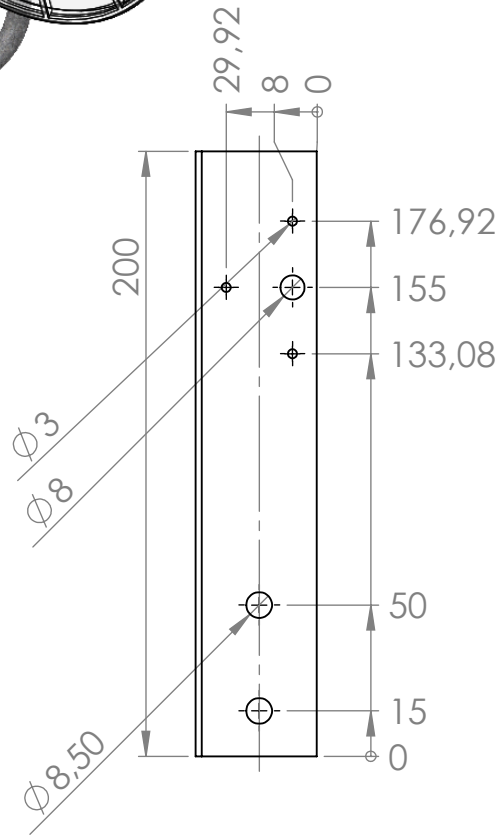Filament Spooler 1:2.5