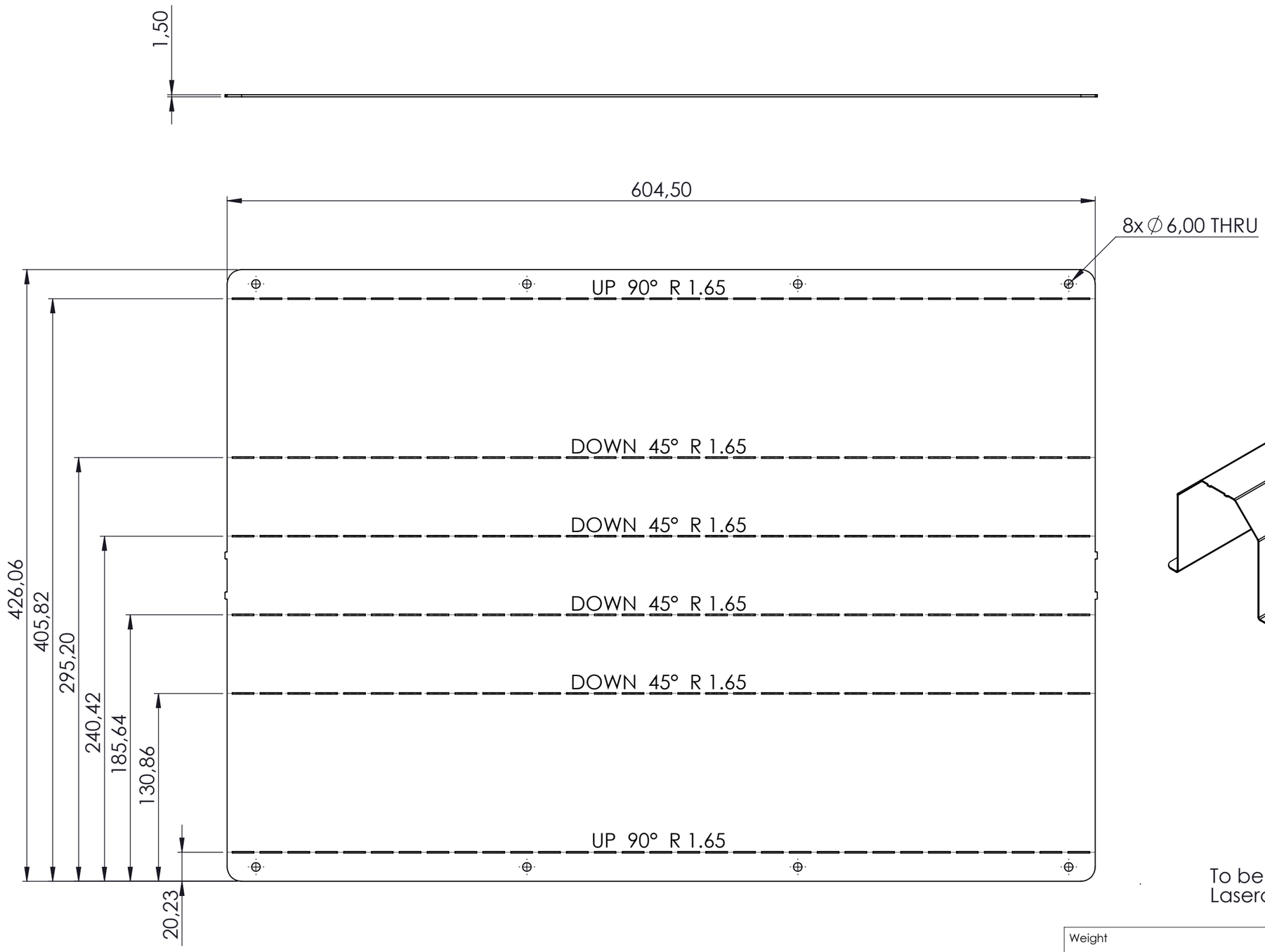


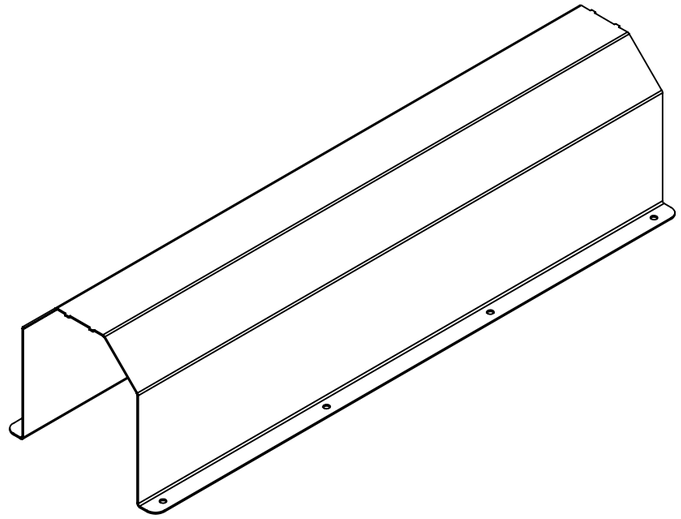

To be lasercut and bent
Lasercut file: EXTPRO-1 3300.03-2 - 1.5mm - x1

| | | | | | |
|---|---|---|---|---|---|
| Weight 3010.0679 g | Material 1.0037 (S235JR) | | | | |
| Machine Extruder Pro | Description Barrel Outer Cover | | | | |
| Projection method: First angle | Release date 1-4-2022 | Drawing no: EXTPRO-1 3300.03-2 | | | Rev. A |
| General tolerances Geometrical Tolerances: ISO 2768-m General surface finish: 6.4 | Doc. type Part | Units unless specified mm/g | Sheet size A3 | Scale 1:3 | Sheet 1/1 |