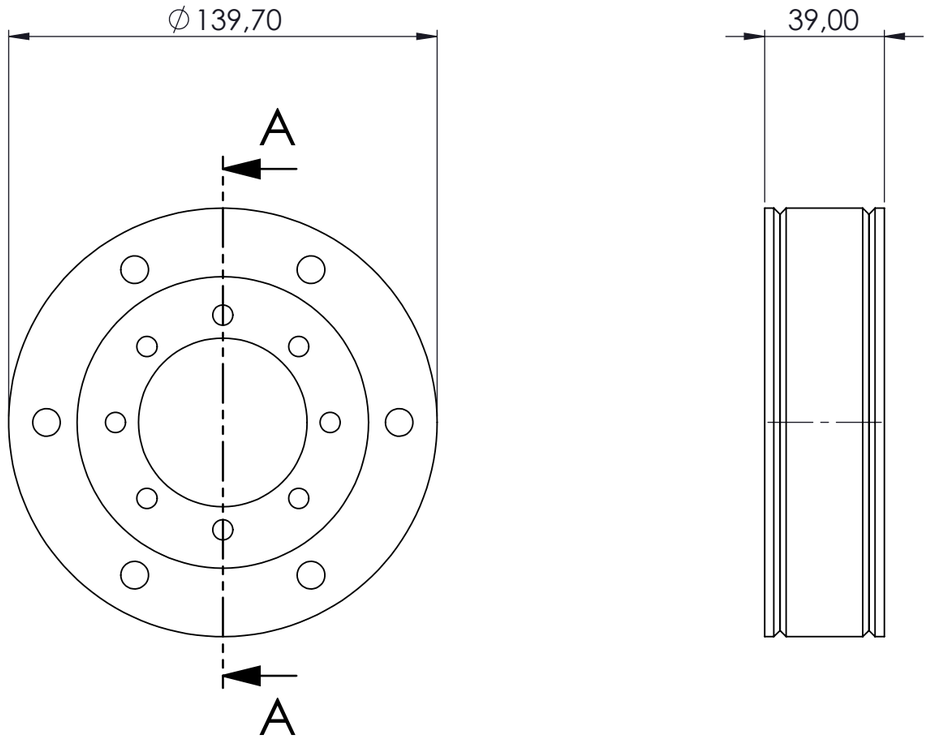

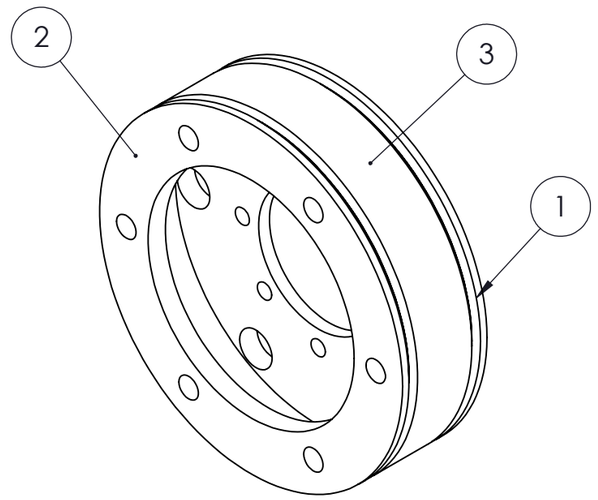

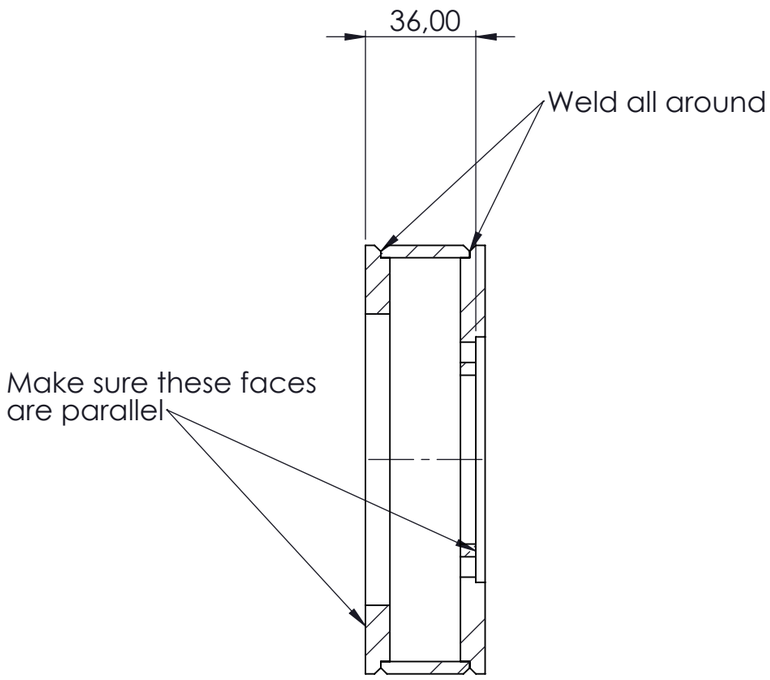

SECTION A-A

Paint after welding, heat resistant paint is recommended

ITEM NO.	PART NUMBER	DESCRIPTION	QTY.
1	EXTPRO-1 1400.01-2	Lasercut motor adapter, extruder side	1
2	EXTPRO-1 1400.02-2	Lasercut motor adapter, Motor flange	1
3	EXTPRO-1 1400.03-2	Lasercut Motor Adaptor, middle	1

Weight 1438.4826 g		Material Material <not specified>			
Machine Extruder Pro		Description Lasercut motor adapter Assy			
Projection method: First angle		Release date 1-4-2022	Drawing no: EXTPRO-1 1400.00-2		Rev. A
General tolerances Geometrical Tolerances: ISO 2768-m General surface finish: 6.4		Doc. type Assembly	Units unless specified mm/g	Sheet size A3	Scale 1:2	Sheet 1/1